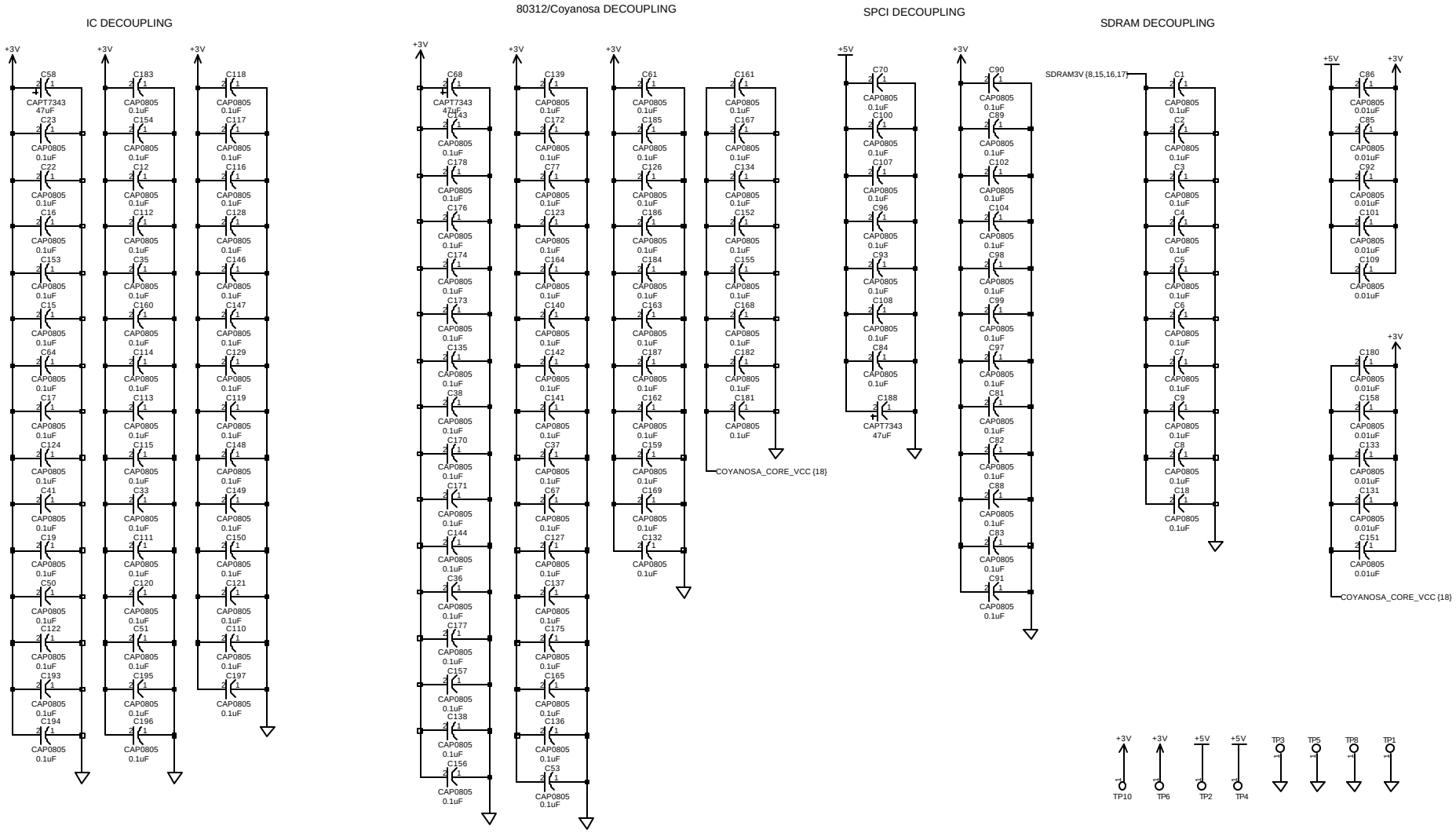

CYCLONE MICROSYSTEMS 25 SCIENCE PARK NEW HAVEN, CT 06511	Title: IQ80310_NOINT	
	Name: DECOUPLING	REV F
	Date:2001/02/08	Sheet 1 of 18

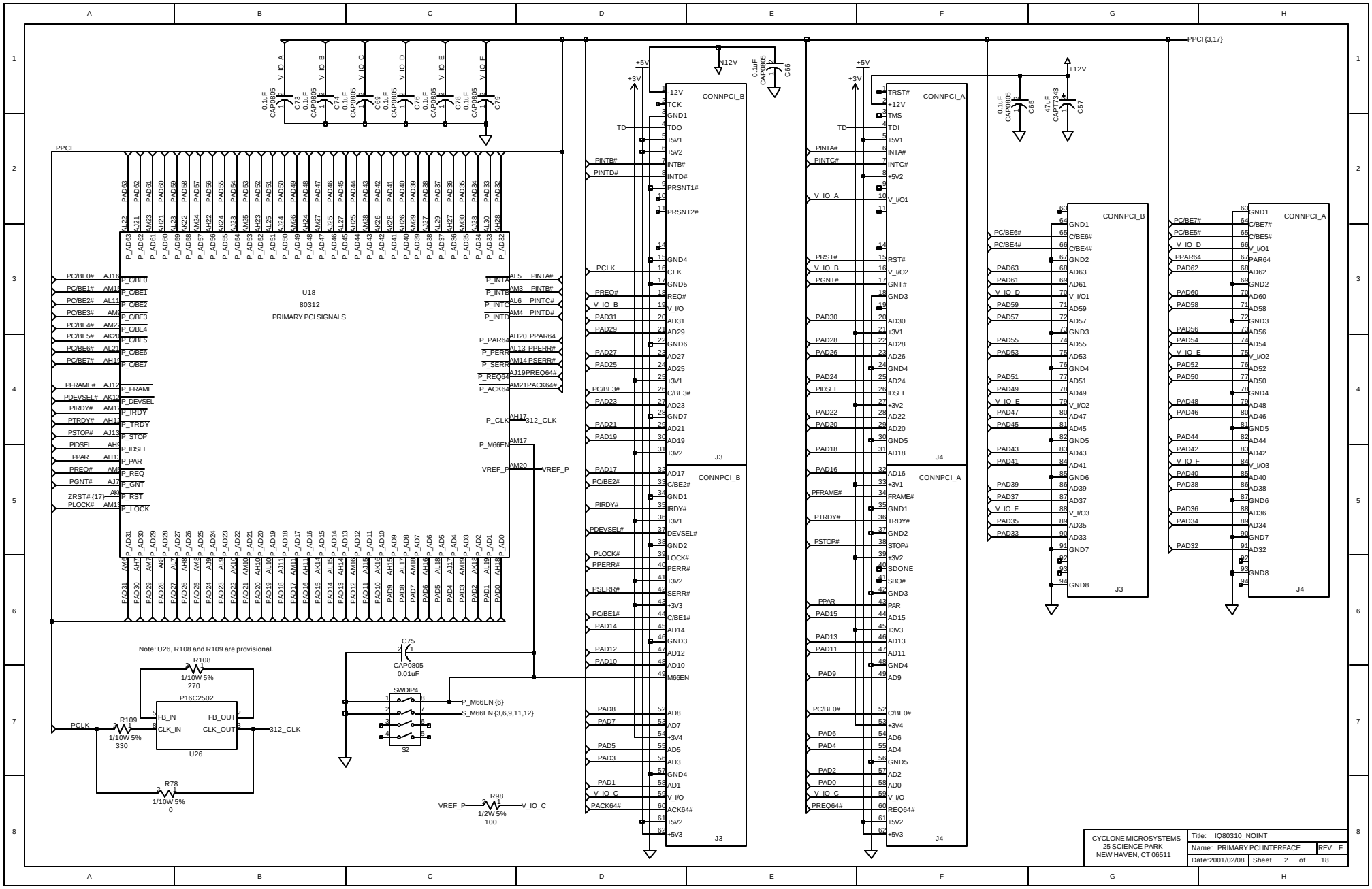
U18
80312
PRIMARY PCI SIGNALS
Note: U26, R108 and R109 are provisional.
P16C2502
U26
R108
1/10W 5%
270
R109
1/10W 5%
330
R78
1/10W 5%
0
C75
CAP0805
0.01uF
SWDIP4
S2
R98
1/2W 5%
100
CONNPCI_B
CONNPCI_A
J3
J4
PPCI
PPCI {3,17}
CYCLONE MICROSYSTEMS
25 SCIENCE PARK
NEW HAVEN, CT 06511
Title: IQ80310_NOINT
Name: PRIMARY PCI INTERFACE
REV F
Date:2001/02/08
Sheet 2 of 18

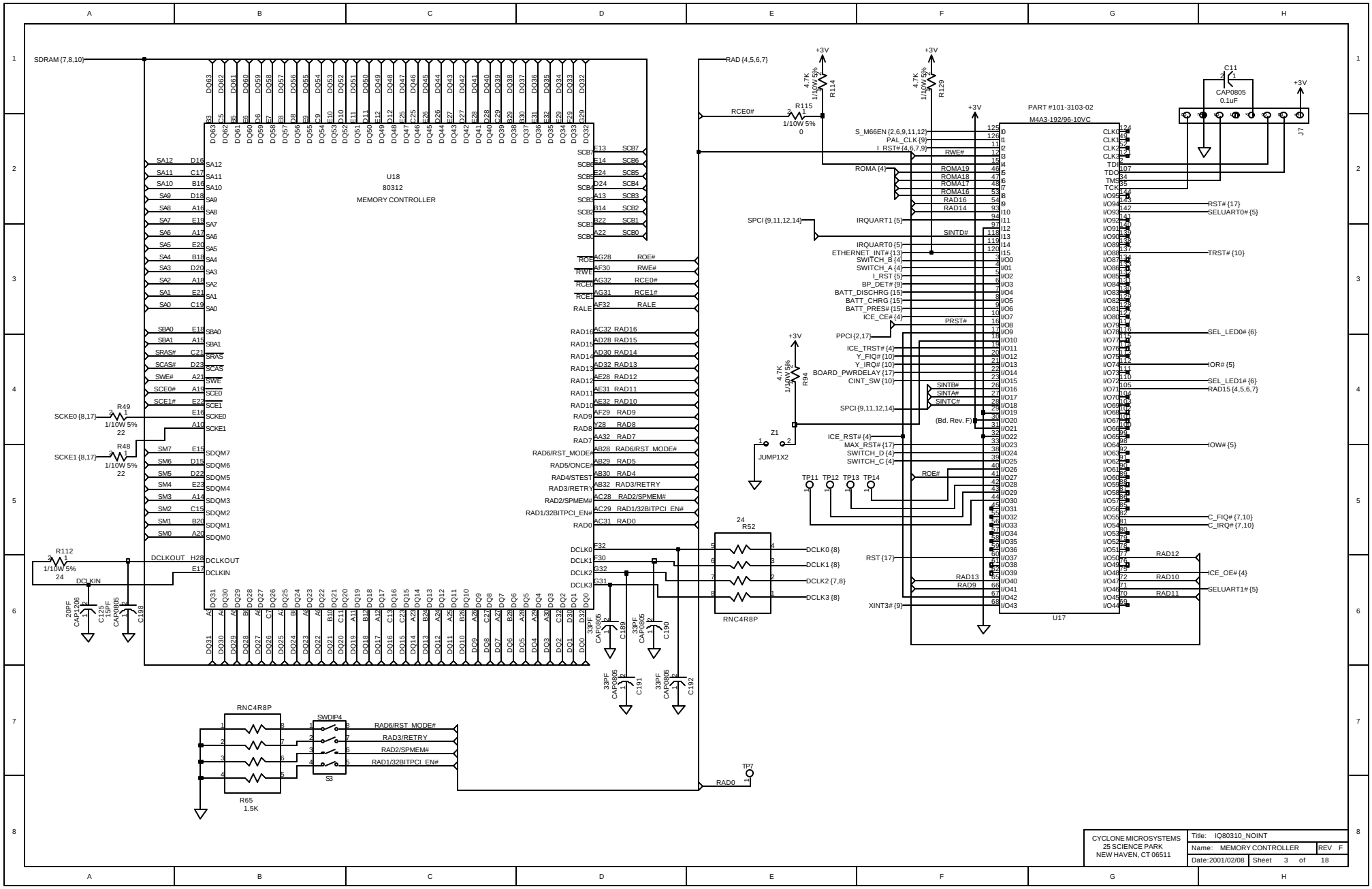
U18
80312
MEMORY CONTROLLER
PART #101-3103-02
M4A3-192/96-10VC
U17
RNC4R8P
SWDIP4
S3
J7
JUMP1X2
CYCLONE MICROSYSTEMS
25 SCIENCE PARK
NEW HAVEN, CT 06511
Title: IQ80310_NOINT
Name: MEMORY CONTROLLER
REV F
Date:2001/02/08
Sheet 3 of 18

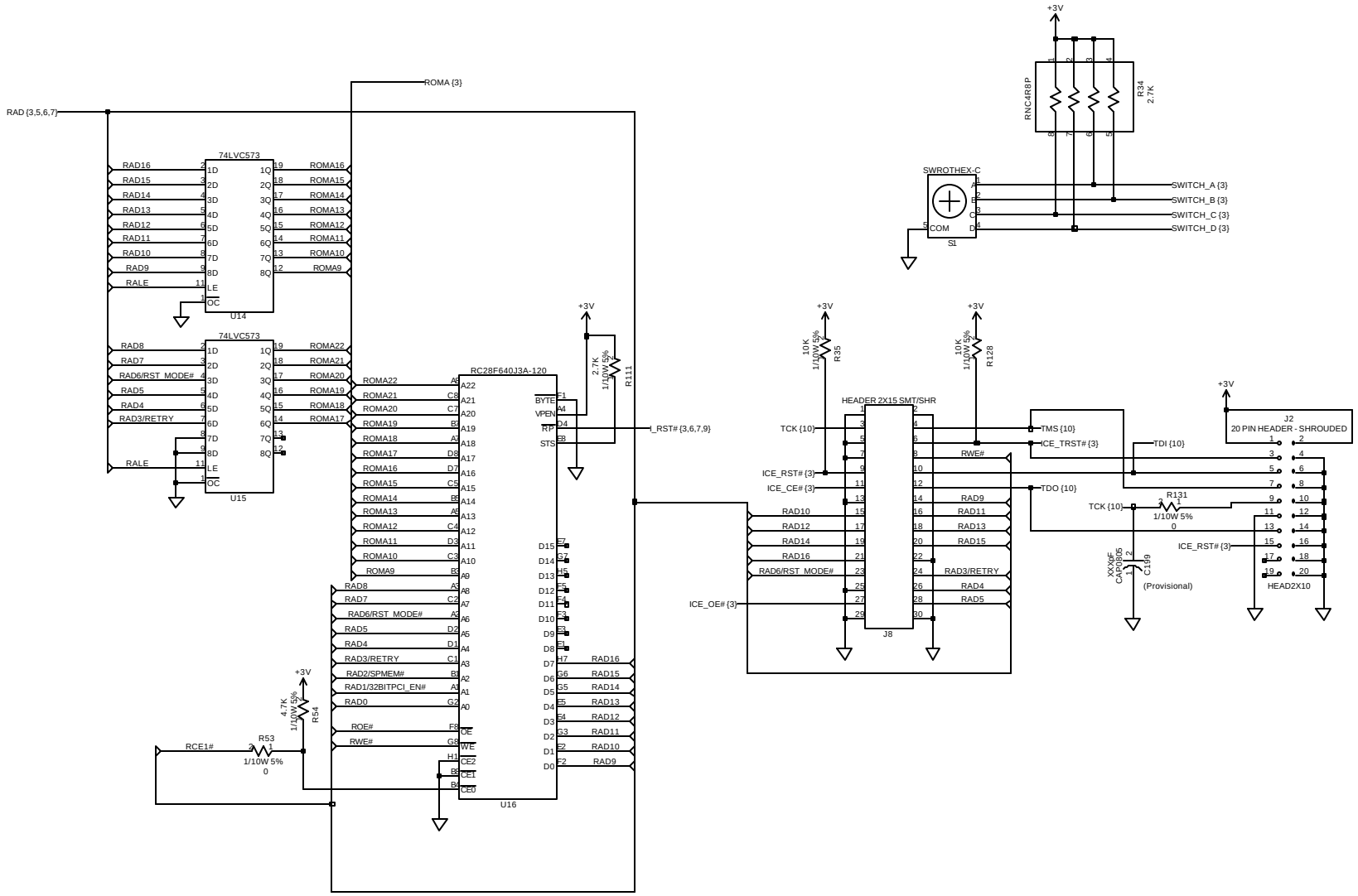

CYCLONE MICROSYSTEMS 25 SCIENCE PARK NEW HAVEN, CT 06511	Title: IQ80310_NOINT	
	Name: FLASH ROM/BOOT SELECT	REV F
	Date:2001/02/08	Sheet 4 of 18

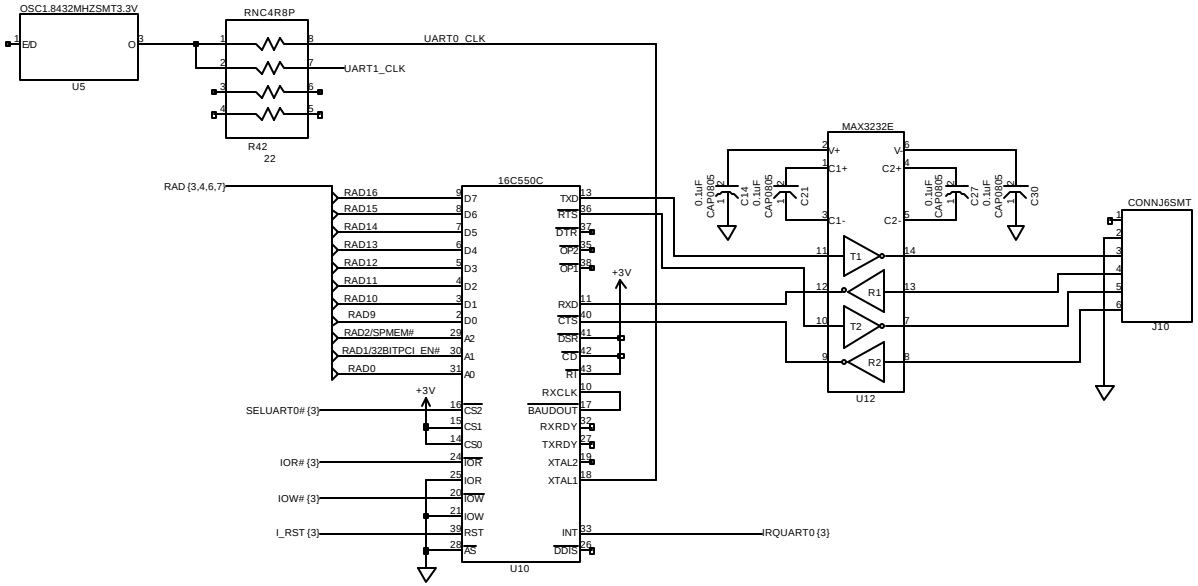

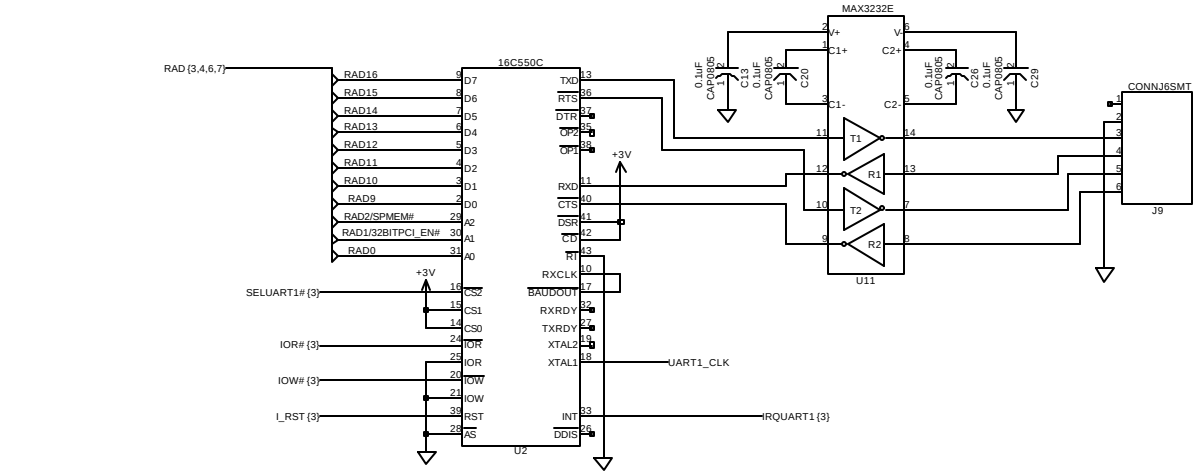

CYCLONE MICROSYSTEMS 25 SCIENCE PARK NEW HAVEN, CT 06511	Title: IQ80310_NOINT	
	Name: UART I/F	REV F
	Date:2001/02/08	Sheet 5 of 18

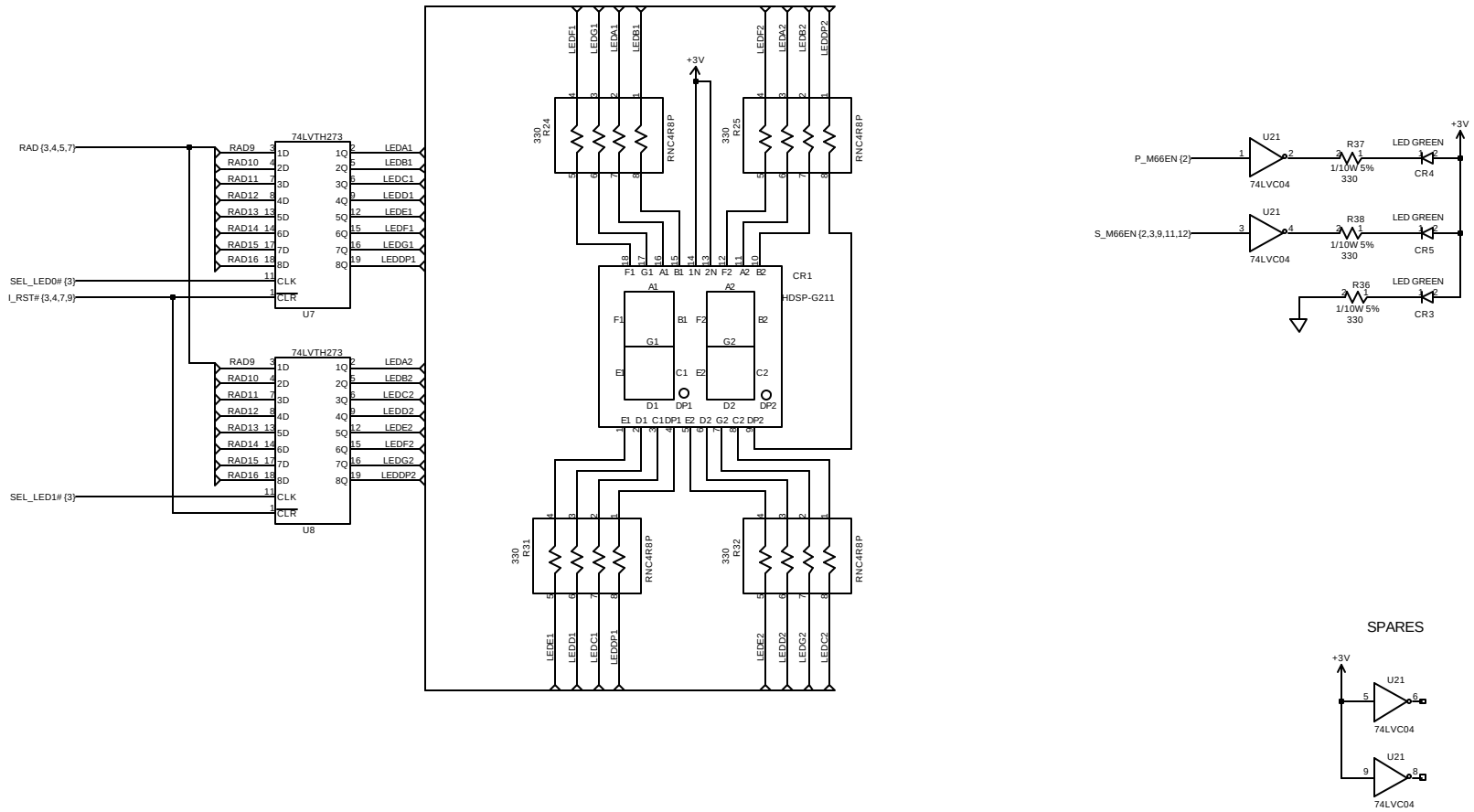

CYCLONE MICROSYSTEMS 25 SCIENCE PARK NEW HAVEN, CT 06511	Title: IQ80310_NOINT	
	Name: LEDs	REV F
	Date:2001/02/08	Sheet 6 of 18

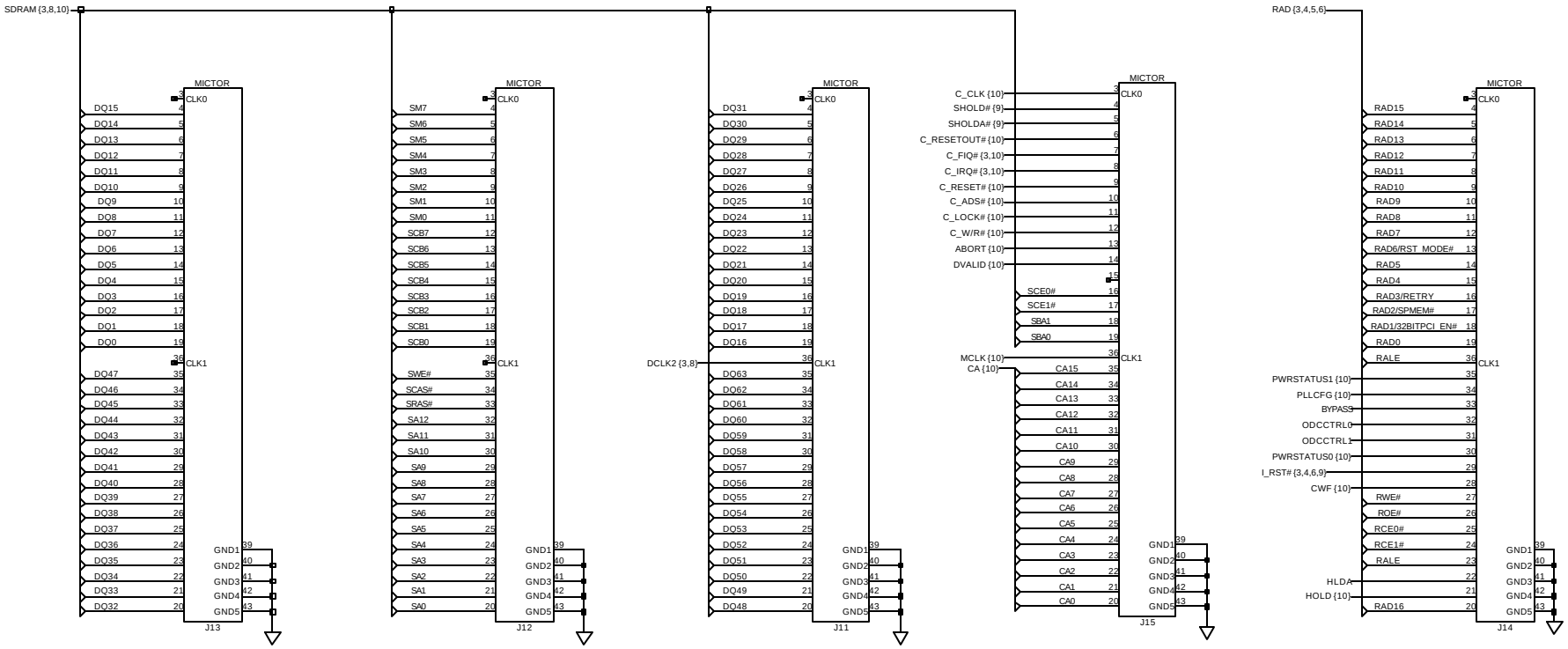

CYCLONE MICROSYSTEMS 25 SCIENCE PARK NEW HAVEN, CT 06511	Title: IQ80310_NOINT	
	Name: LOGIC ANALYZER I/F	REV F
	Date: 2001/02/08	Sheet 7 of 18

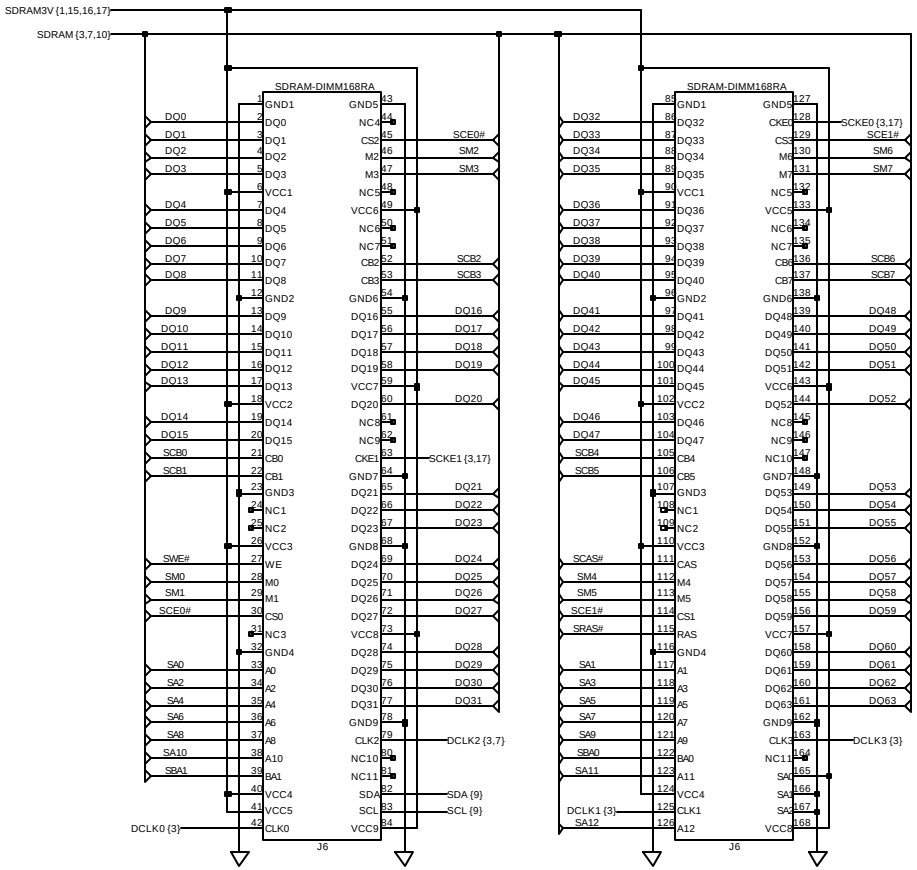

CYCLONE MICROSYSTEMS 25 SCIENCE PARK NEW HAVEN, CT 06511	Title: IQ80310_NOINT	
	Name: SDRAM 168-PIN DIMM	REV F
	Date: 2001/02/08	Sheet 8 of 18

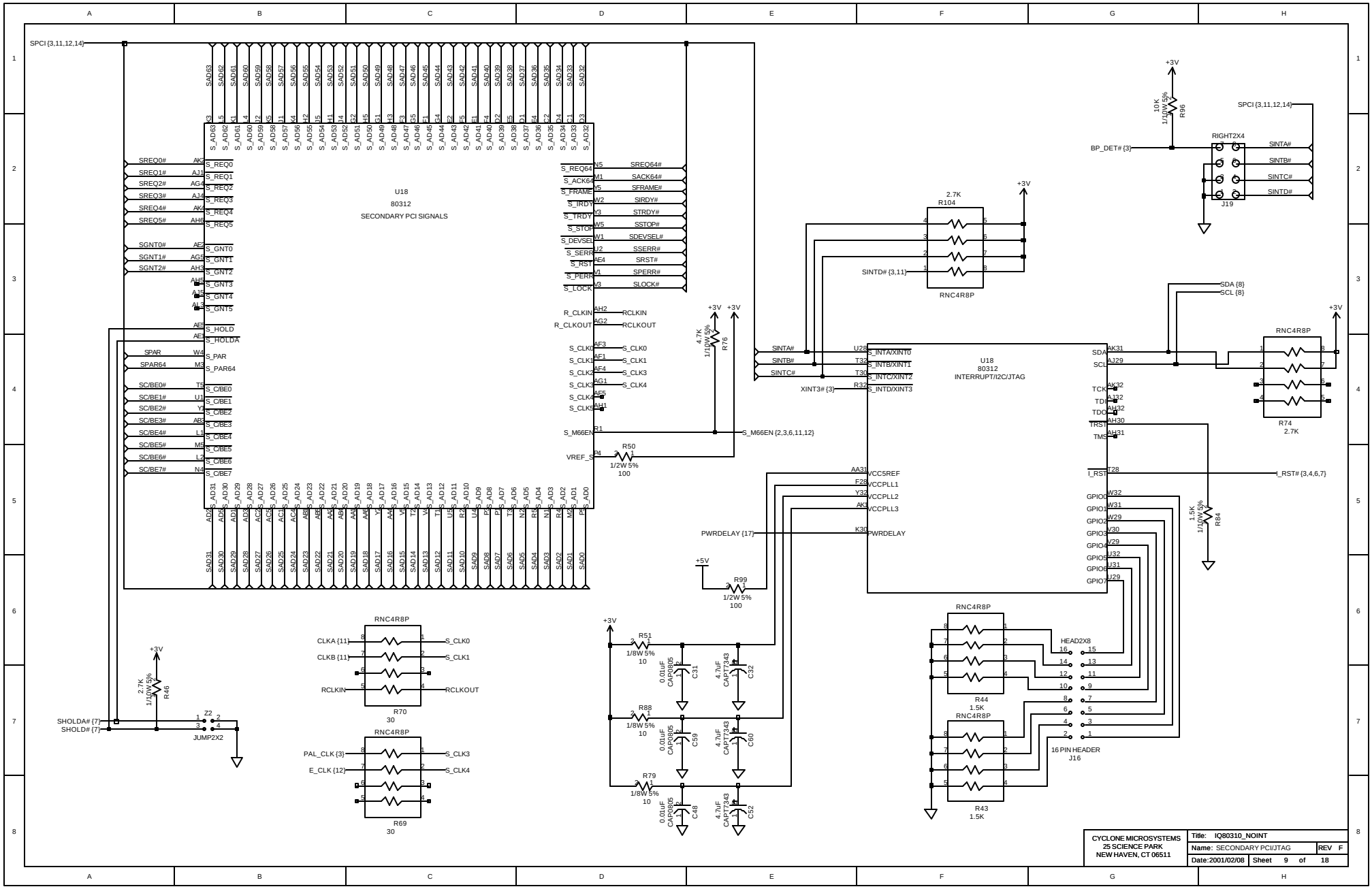
U18
80312
SECONDARY PCI SIGNALS
U18
80312
INTERRUPT/I2C/JTAG
RNC4R8P
RIGHT2X4
J19
HEAD2X8
16 PIN HEADER
J16
JUMP2X2
CYCLONE MICROSYSTEMS
25 SCIENCE PARK
NEW HAVEN, CT 06511
Title: IQ80310_NOINT
Name: SECONDARY PCI/JTAG
REV F
Date:2001/02/08
Sheet 9 of 18

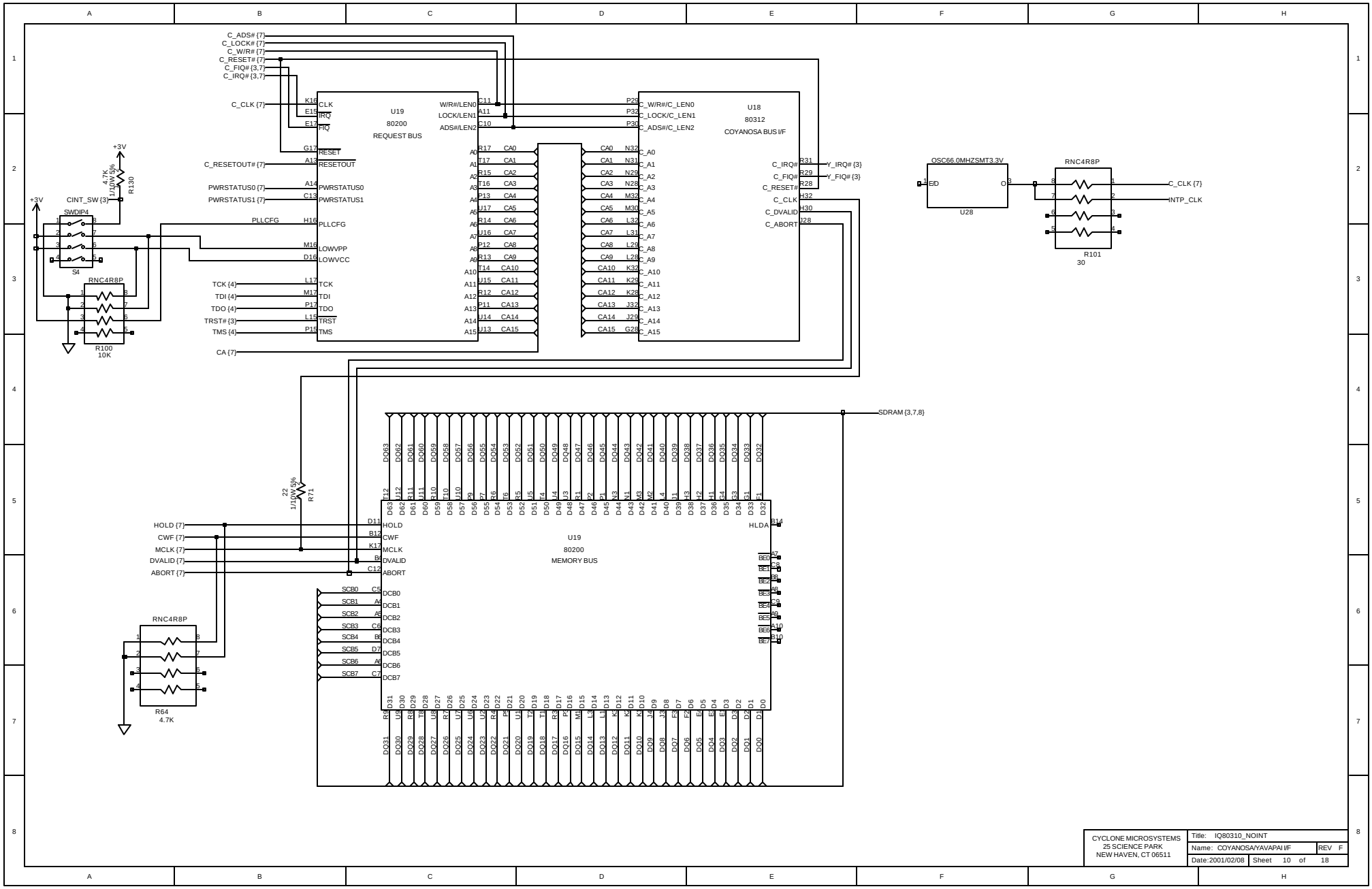

CYCLONE MICROSYSTEMS 25 SCIENCE PARK NEW HAVEN, CT 06511	Title: IQ80310_NOINT	
	Name: COYANOSA/YAVAPAI I/F	REV F
	Date:2001/02/08	Sheet 10 of 18

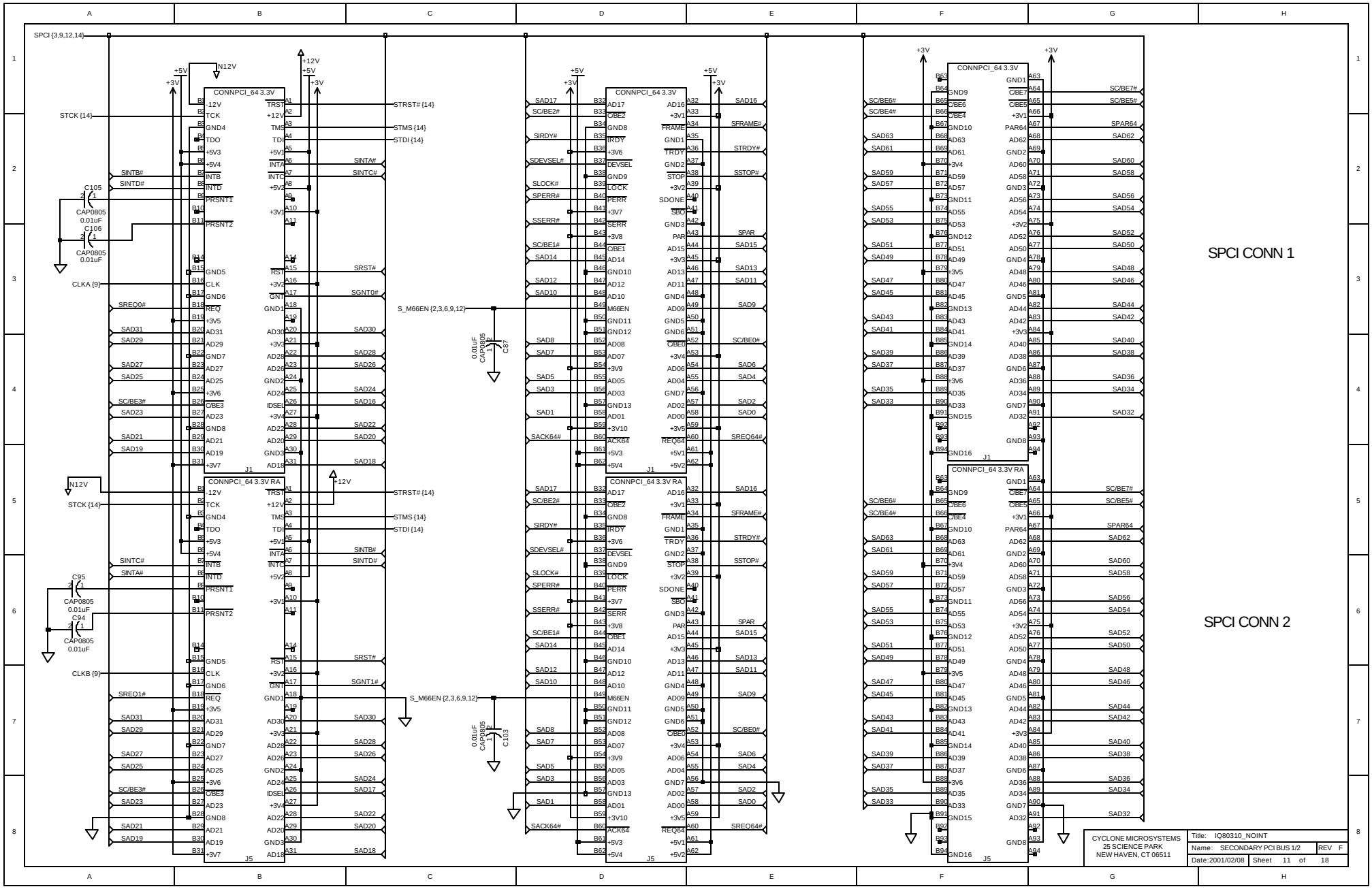
SPCI CONN 1
SPCI CONN 2
CONNPCI_64 3.3V
CONNPCI_64 3.3V RA
SPCI {3,9,12,14}
STCK {14}
CLKA {9}
CLKB {9}
S_M66EN {2,3,6,9,12}
STRST# {14}
STMS {14}
STDI {14}
C105
C106
C95
C94
C87
C103
CAP0805
0.01uF
CYCLONE MICROSYSTEMS
25 SCIENCE PARK
NEW HAVEN, CT 06511
Title: IQ80310_NOINT
Name: SECONDARY PCI BUS 1/2
REV F
Date:2001/02/08
Sheet 11 of 18

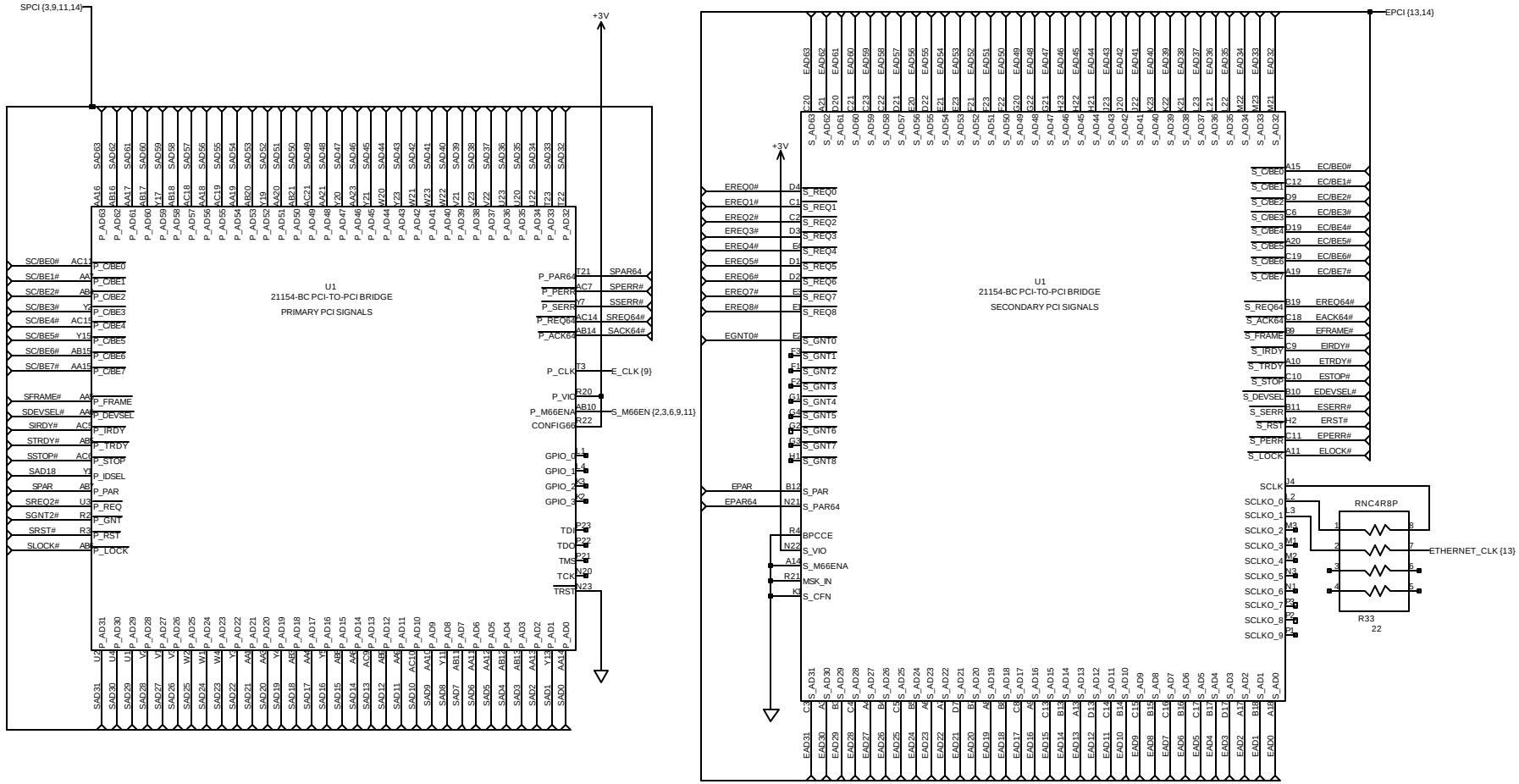

CYCLONE MICROSYSTEMS 25 SCIENCE PARK NEW HAVEN, CT 06511	Title: IQ80310_NOINT	
	Name: 21154 PCI BRIDGE	REV F
	Date: 2001/02/08	Sheet 12 of 18

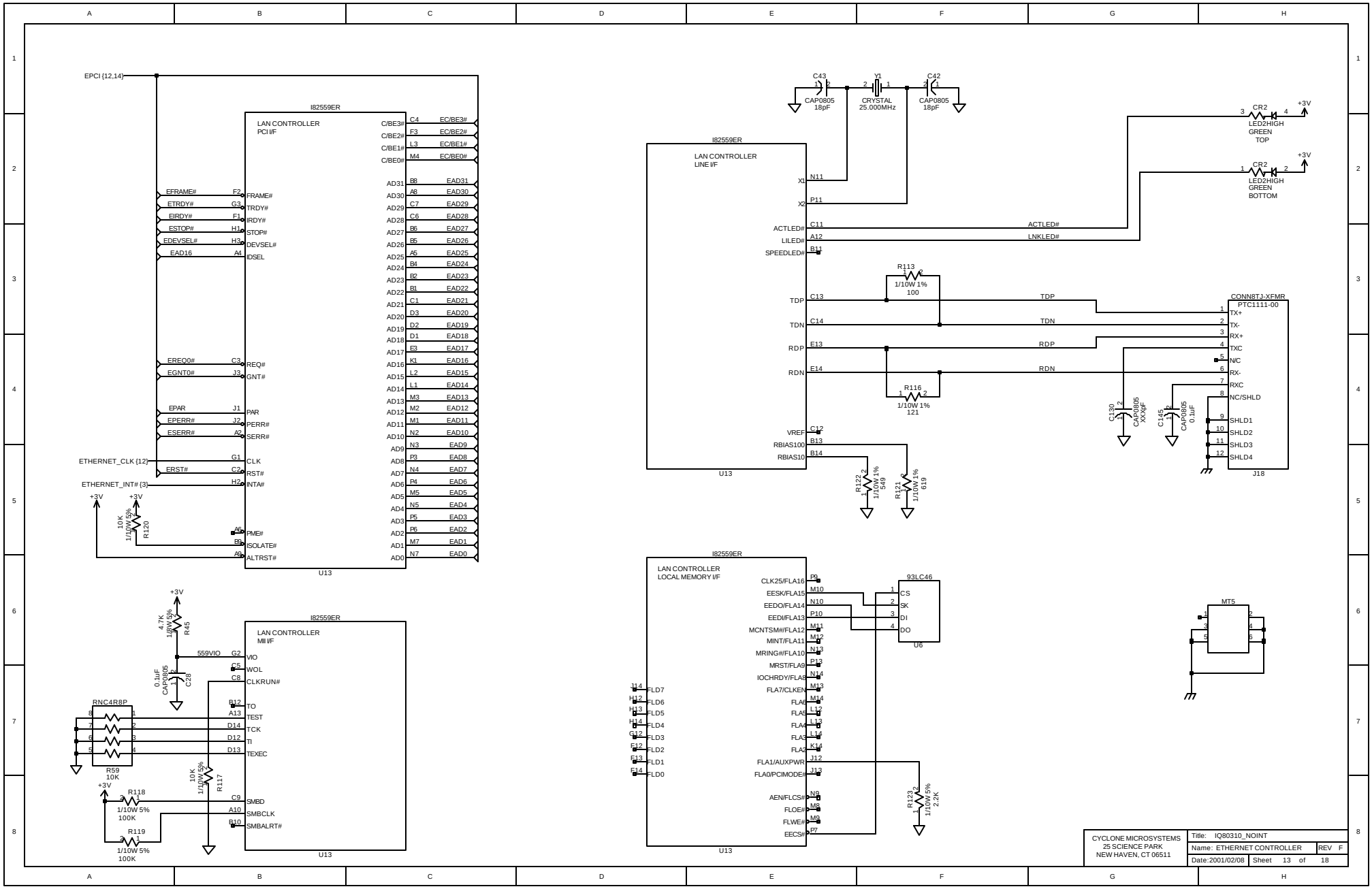
I82559ER
LAN CONTROLLER PCI I/F
U13
EPCI {12,14}
EFRAME# F2 FRAME#
ETRDY# G3 TRDY#
EIRDY# F1 IRDY#
ESTOP# H1 STOP#
EDEVSEL# H3 DEVSEL#
EAD16 A4 IDSEL
EREQ0# C3 REQ#
EGNT0# J3 GNT#
EPAR J1 PAR
EPERR# J2 PERR#
ESERR# A2 SERR#
ETHERNET_CLK {12} G1 CLK
ERST# C2 RST#
ETHERNET_INT# {3} H2 INTA#
A6 PME#
B8 ISOLATE#
A9 ALTRST#
C/BE3# C4 EC/BE3#
C/BE2# F3 EC/BE2#
C/BE1# L3 EC/BE1#
C/BE0# M4 EC/BE0#
AD31 B8 EAD31
AD30 A8 EAD30
AD29 C7 EAD29
AD28 C6 EAD28
AD27 B6 EAD27
AD26 B5 EAD26
AD25 A5 EAD25
AD24 B4 EAD24
AD23 B2 EAD23
AD22 B1 EAD22
AD21 C1 EAD21
AD20 D3 EAD20
AD19 D2 EAD19
AD18 D1 EAD18
AD17 E3 EAD17
AD16 K1 EAD16
AD15 L2 EAD15
AD14 L1 EAD14
AD13 M3 EAD13
AD12 M2 EAD12
AD11 M1 EAD11
AD10 N2 EAD10
AD9 N3 EAD9
AD8 P3 EAD8
AD7 N4 EAD7
AD6 P4 EAD6
AD5 M5 EAD5
AD4 N5 EAD4
AD3 P5 EAD3
AD2 P6 EAD2
AD1 M7 EAD1
AD0 N7 EAD0
+3V
10K 1/10W 5% R120
I82559ER
LAN CONTROLLER MII I/F
U13
4.7K 1/8W 5% R45
559VIO G2 VIO
C5 WOL
C8 CLKRUN#
0.1uF CAP0805 C28
RNC4R8P
R59 10K
B12 TO
A13 TEST
D14 TCK
D12 TI
D13 TEXEC
10K 1/10W 5% R117
R118 1/10W 5% 100K
R119 1/10W 5% 100K
C9 SMBD
A10 SMBCLK
B10 SMBALRT#
C43 CAP0805 18pF
Y1 CRYSTAL 25.000MHz
C42 CAP0805 18pF
I82559ER
LAN CONTROLLER LINE I/F
X1 N11
X2 P11
ACTLED# C11
LILED# A12
SPEEDLED# B11
TDP C13
TDN C14
RDP E13
RDN E14
VREF C12
RBIAS100 B13
RBIAS10 B14
R113 1/10W 1% 100
R116 1/10W 1% 121
R122 1/10W 1% 549
R121 1/10W 1% 619
CR2 LED2HIGH GREEN TOP
CR2 LED2HIGH GREEN BOTTOM
ACTLED#
LNKLED#
CONN8TJ-XFMR PTC1111-00
TX+
TX-
RX+
TXC
N/C
RX-
RXC
NC/SHLD
SHLD1
SHLD2
SHLD3
SHLD4
J18
C130 CAP0805 XXXpF
C145 CAP0805 0.1uF
I82559ER
LAN CONTROLLER LOCAL MEMORY I/F
U13
CLK25/FLA16 P9
EESK/FLA15 M10
EEDO/FLA14 N10
EEDI/FLA13 P10
MCNTSM#/FLA12 M11
MINT/FLA11 M12
MRING#/FLA10 N13
MRST/FLA9 P13
IOCHRDY/FLA8 N14
FLA7/CLKEN M13
FLA6 M14
FLA5 L12
FLA4 L13
FLA3 L14
FLA2 K14
FLA1/AUXPWR J12
FLA0/PCIMODE# J13
AEN/FLCS# N9
FLOE# M8
FLWE# M9
EECS# P7
FLD7 J14
FLD6 H12
FLD5 H13
FLD4 H14
FLD3 G12
FLD2 F12
FLD1 F13
FLD0 F14
93LC46
CS
SK
DI
DO
U6
R123 1/10W 5% 2.2K
MT5
CYCLONE MICROSYSTEMS
25 SCIENCE PARK
NEW HAVEN, CT 06511
Title: IQ80310_NOINT
Name: ETHERNET CONTROLLER
REV F
Date:2001/02/08
Sheet 13 of 18

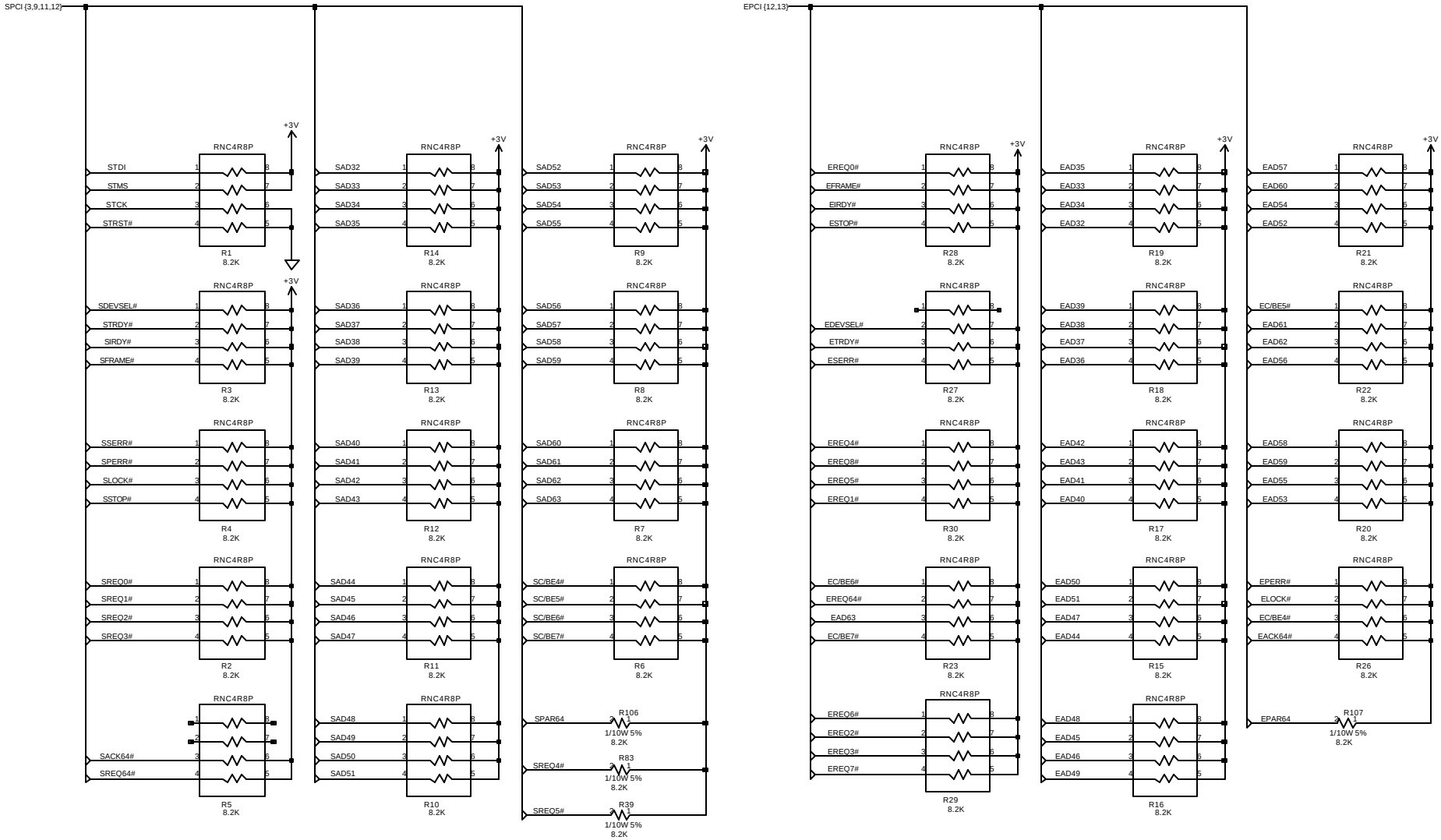

CYCLONE MICROSYSTEMS 25 SCIENCE PARK NEW HAVEN, CT 06511	Title: IQ80310_NOINT	
	Name: SPCI PULL-UPS	REV F
	Date:2001/02/08	Sheet 14 of 18

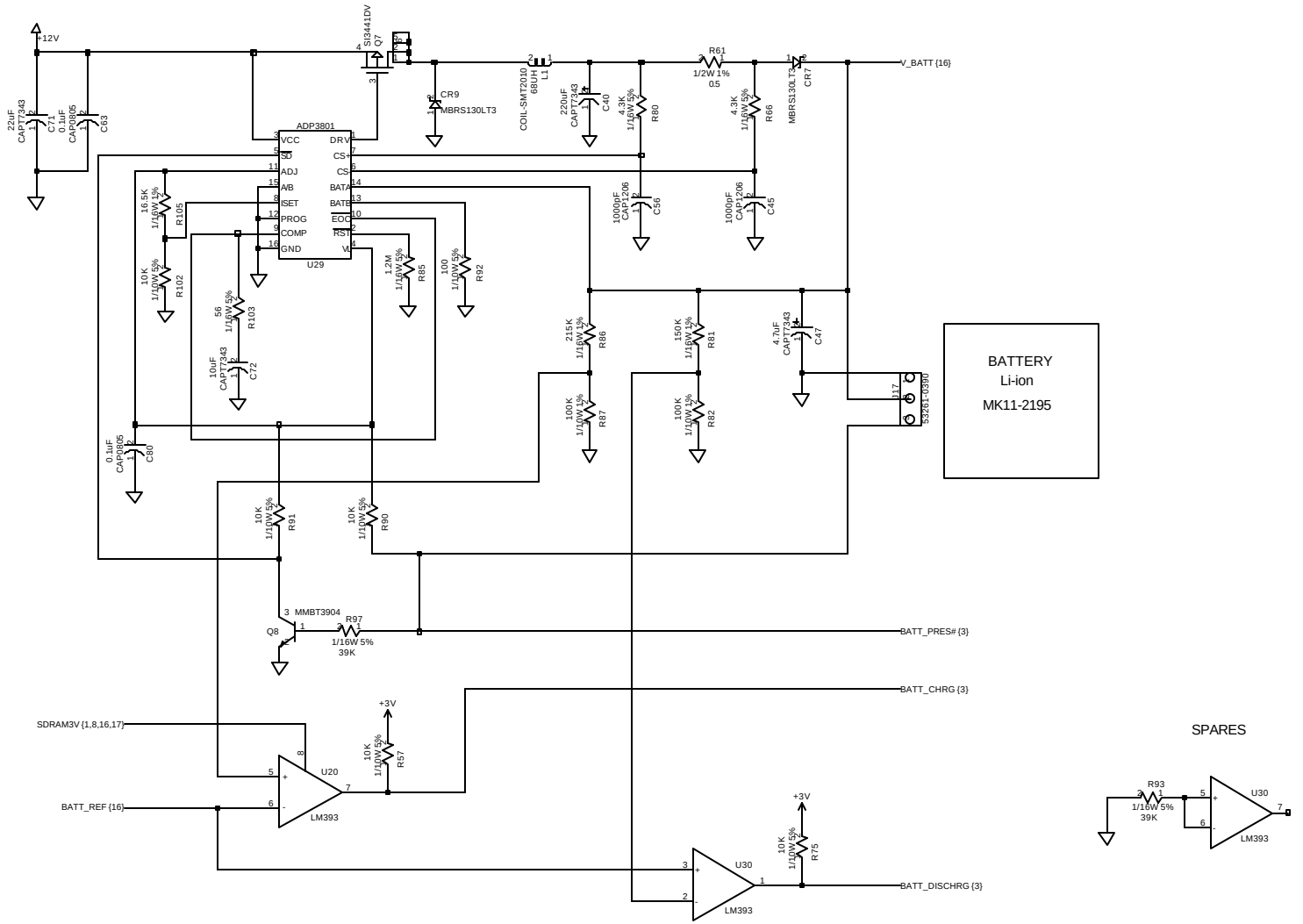

CYCLONE MICROSYSTEMS 25 SCIENCE PARK NEW HAVEN, CT 06511	Title: IQ80310_NOINT	
	Name: BATTERY/MONITOR	REV F
	Date:2001/02/08	Sheet 15 of 18

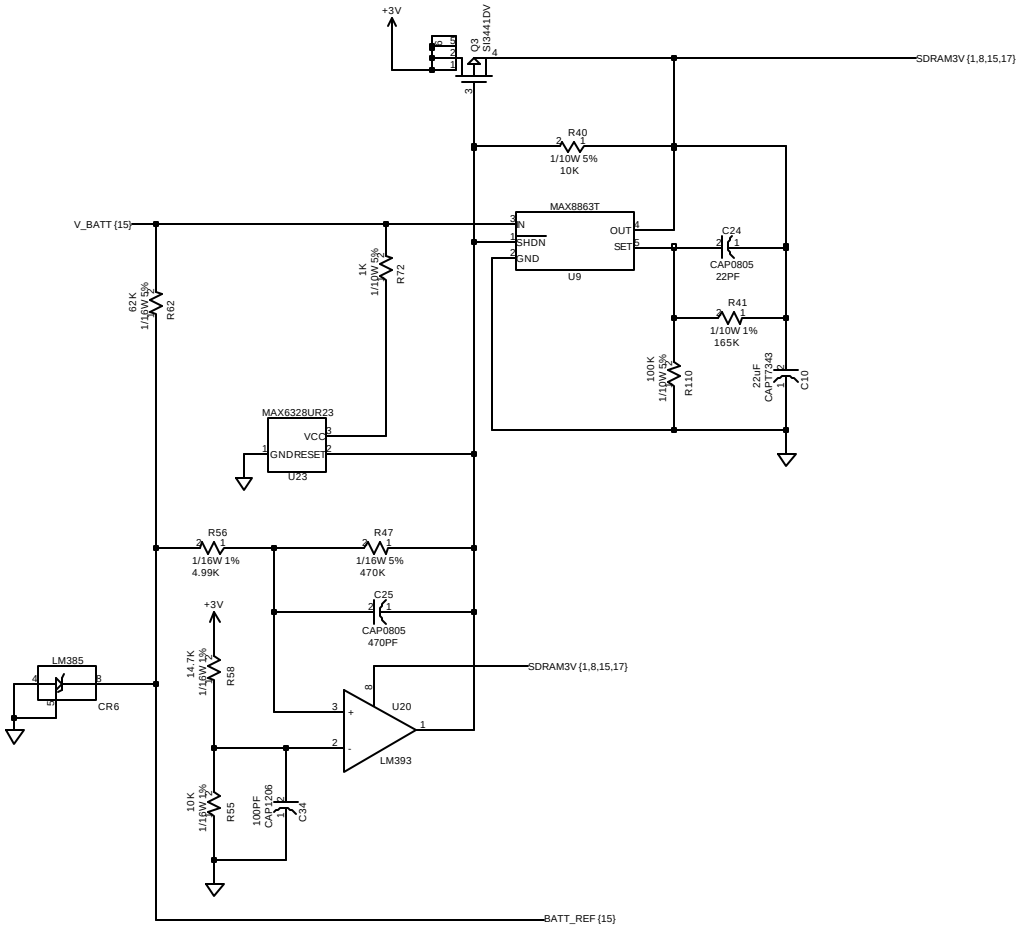

CYCLONE MICROSYSTEMS 25 SCIENCE PARK NEW HAVEN, CT 06511	Title: IQ80310_NOINT	
	Name: SDRAM +3.3V REFERENCE	REV F
	Date: 2001/02/08	Sheet 16 of 18

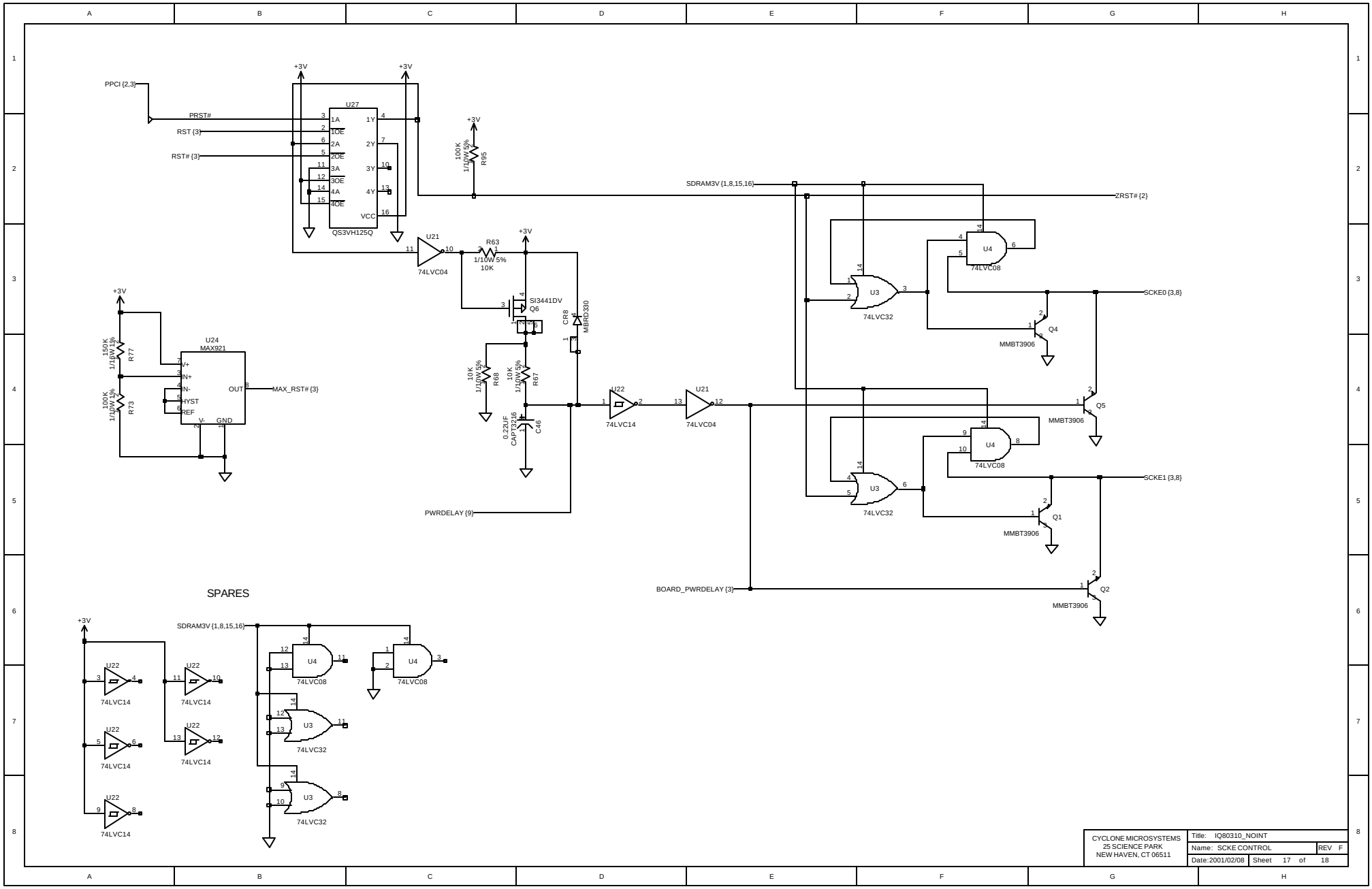
PPCI {2,3}
PRST#
RST {3}
RST# {3}
U27
QS3VH125Q
+3V
100K 1/10W 5% R95
SDRAM3V {1,8,15,16}
ZRST# {2}
U21
74LVC04
R63 1/10W 5% 10K
SI3441DV Q6
CR8 MBRD330
U22
74LVC14
U3
74LVC32
U4
74LVC08
SCKE0 {3,8}
SCKE1 {3,8}
Q4
Q5
Q1
Q2
MMBT3906
U24 MAX921
150K 1/10W 1% R77
100K 1/10W 1% R73
OUT
MAX_RST# {3}
10K 1/10W 5% R68
10K 1/10W 5% R67
0.22UF CAPT3216 C46
PWRDELAY {9}
BOARD_PWRDELAY {3}
SPARES
CYCLONE MICROSYSTEMS
25 SCIENCE PARK
NEW HAVEN, CT 06511
Title: IQ80310_NOINT
Name: SCKE CONTROL
REV F
Date:2001/02/08
Sheet 17 of 18

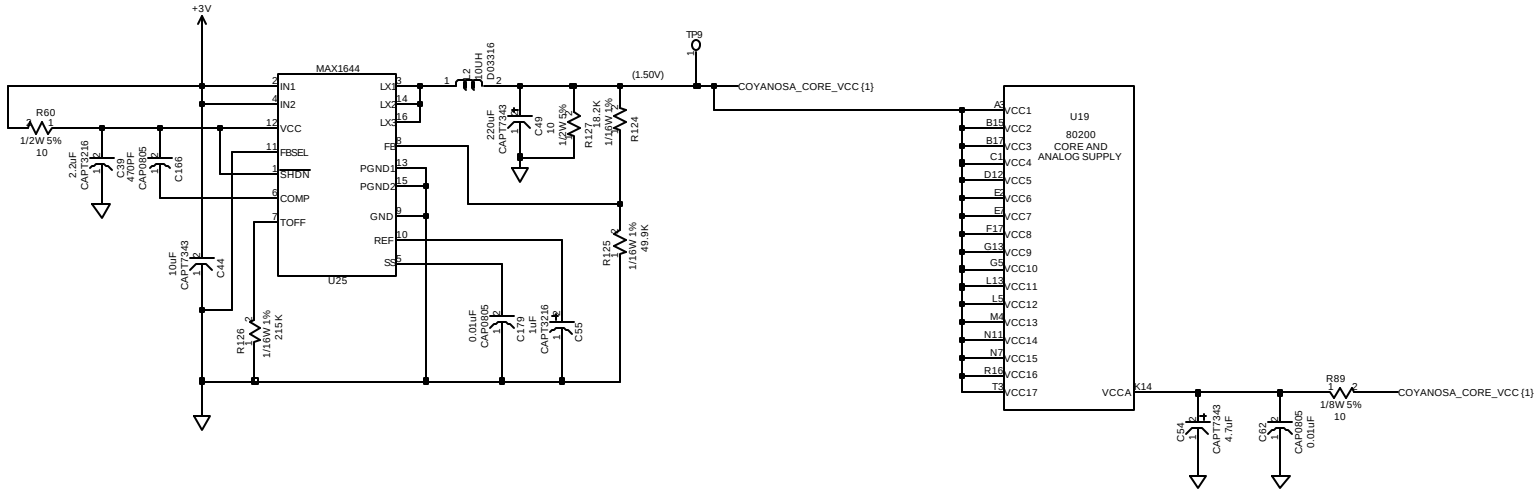

CYCLONE MICROSYSTEMS 25 SCIENCE PARK NEW HAVEN, CT 06511	Title: IQ80310_NOINT	
	Name: COYANOSA CORE SUPPLY	REV F
	Date: 2001/02/08	Sheet 18 of 18